zenith

# ZENITH HYDROTAP G4 CUBE BOILING I CHILLED I SPARKLING
## HT3783NZ

ZENITH HydroTap Design Range Residential, Boiling, Chilled, Sparkling, Filtered water appliance featuring a single under bench command centre including full colour interactive touch screen display with pin code protection, boiling water safety mode, 3 energy saving modes including sensor activated “sleep when its dark”, 0.2 micron water filtration and 2 disposable CO2 cylinders.

## SPECIFICATIONS

| | |
|---|---|
| **Tap** | Zenith HydroTap CUBE Tap |
| **Water Pressure** | Min 250kPa - Max 700kPa |
| **Water Connection** | ”12.7mm BSP “ |
| **Water Supply Requirements** | Cold |
| **Water Valves** | Integrated 500kPa Pressure limiting valve and Dual Check Valve |
| **Power Rating** | 1.7kW 220-240V 50/ 60 Hz |
| **Power Supply** | 1 x 10Amp GPO |
| **Dimensions** | H333mm x W338mm x D461mm |
| **Product Approvals** | WaterMark, CE, RCM, ARC |
| **Warranty** | 5 years (appliance warranty 36 months plus additional 24 months tank warranty) |

zenith

**Installation Requirements:**

"1. Installation and connection of your Zenith HydroTap must be carried out by a qualified person, observing national and local regulations.
2. You will require suitable mains electrical and drinking water connections, plus waste water drainage all within 1.5 metres of the product.
3. HydroTap is air-cooled so discrete cabinetry cut-outs are required for ventilation.
4. Installation on most bench tops is straightforward however some stone bench tops may require a specialised cutting service.
5. If you live in a hard water area, we recommend installation of a Zenith scale filtration kit.
6. Installation by Zenith Professional Service can be arranged with a phone call 0800 558 055 or through www.zentihwater.co.nz
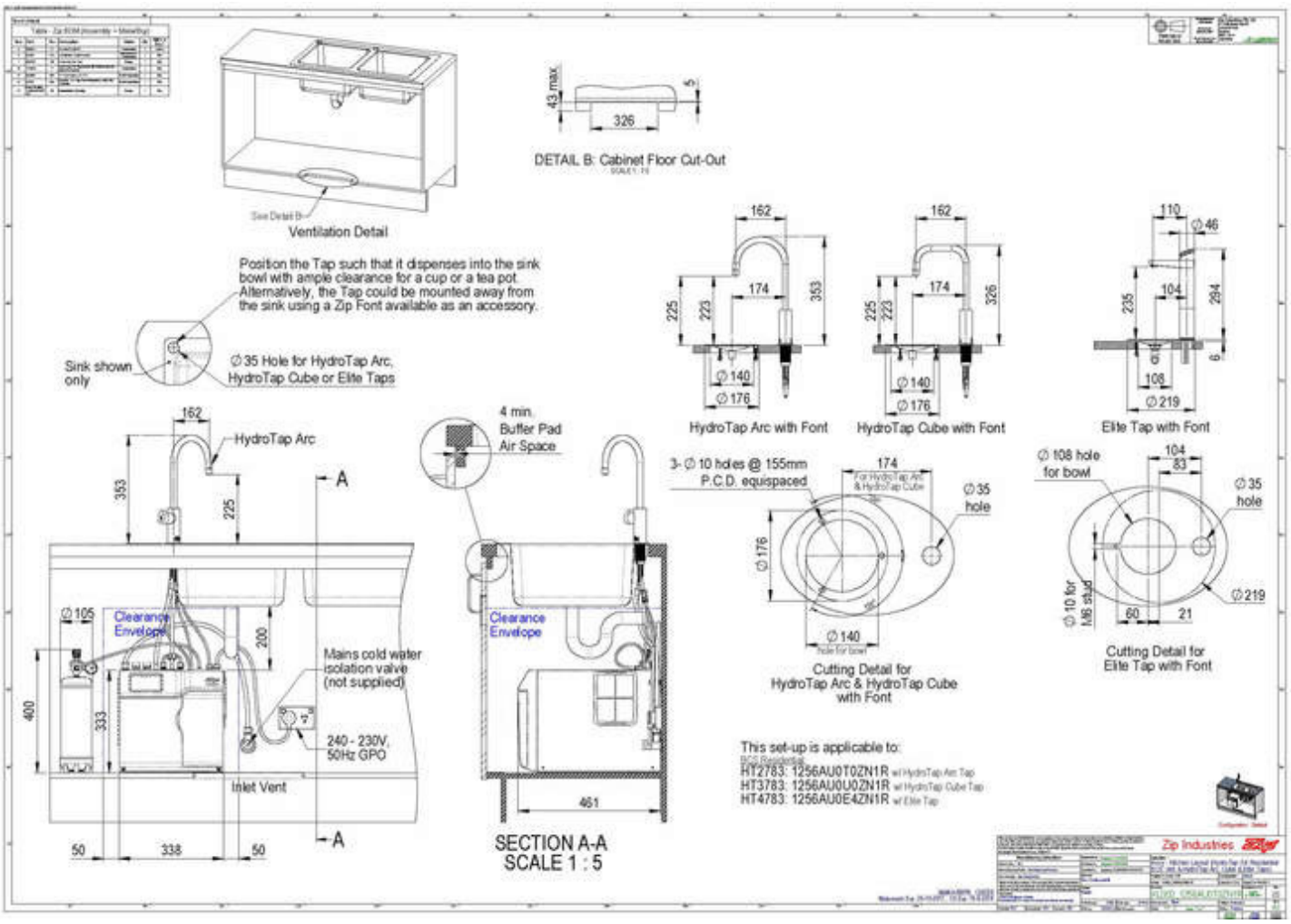
## SPECIFICATIONS